PITANT

R24 assembled outline

Nominal enclosure dimensions with fitted BOPLA side clamps

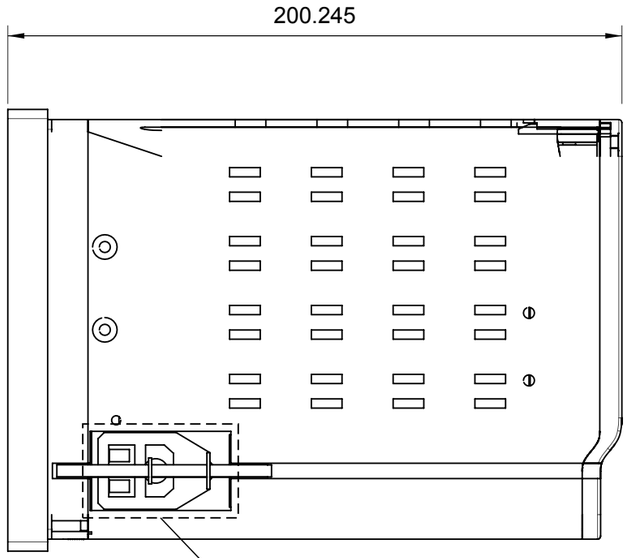

RIGHT SIDE

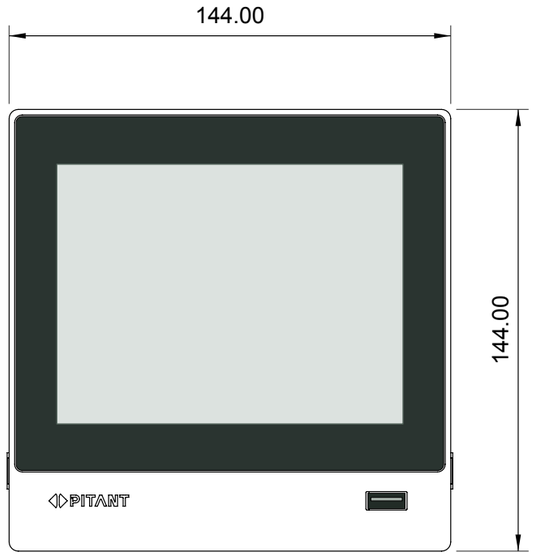

FRONT

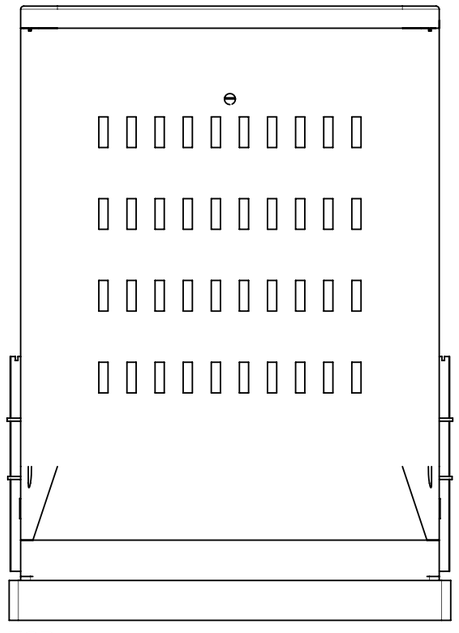

TOP

Panel interface

DETAIL A / FITTED SIDE CLAMP

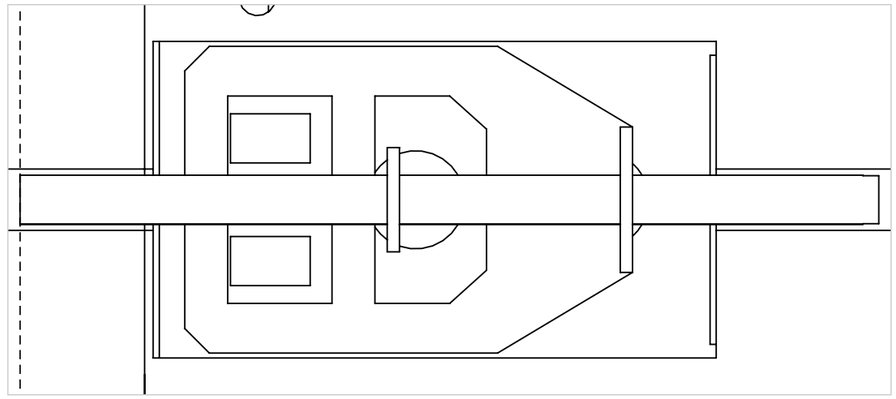

2:1 at A3 · Dashed line marks rear face of reference panel

BOPLA NGS-NK (37003000) · one clamp per side · M4 × 70 screw.
Nominal geometry from BOPLA drawing · 3 mm reference panel.

CABINET PLANNING

Front bezel	**144.00 × 144.00 mm**
Middle housing, nominal	**137.10 × 136.80 mm**
Enclosure depth	**200.245 mm**

Installation documents

Allow additional space for connectors and cable bends.
Request the panel cutout and terminal schedule for the ordered unit before machining the panel or wiring the recorder.

DRAWING CONVENTIONS

ISO 5456-2 · First-angle orthographic projection
ISO 129-1 · Presentation of dimensions
Print at actual size for the stated drawing scale.

PRINT CHECK

0 50 100 mm

DRAWING	MODEL	PROJECTION	SCALE · UNITS	ISSUE DATE	SHEET
Assembled outline · R24-MECH V1.2	**R24**	**First-angle orthographic**	**1:2 at A3 · mm**	**26 November 2026**	**1 / 2**

R24 assembled axonometrics

Fitted touchscreen, side clamps and representative rear connections

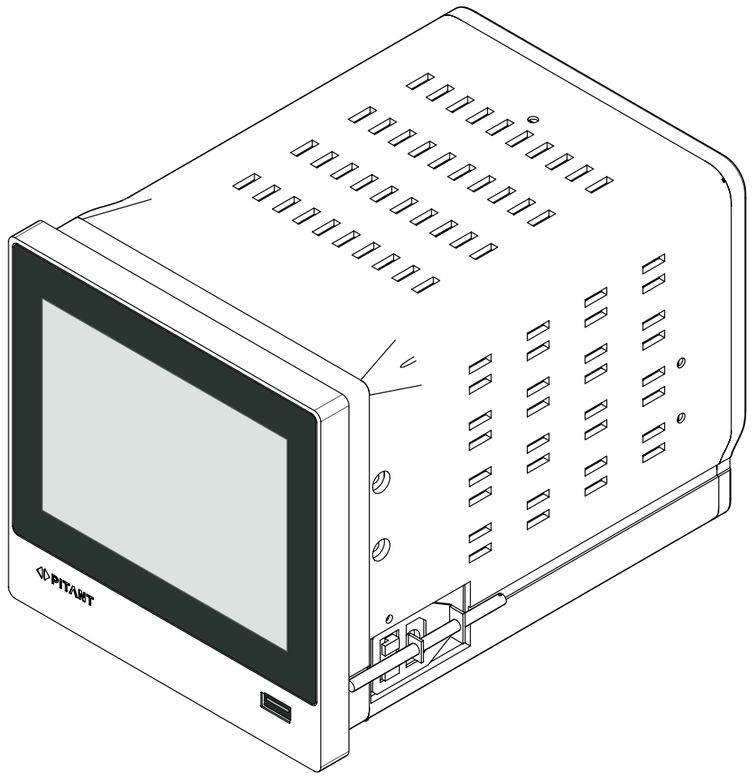

Front · right · top

Fitted touchscreen and front USB
Right NGS-NK side clamp

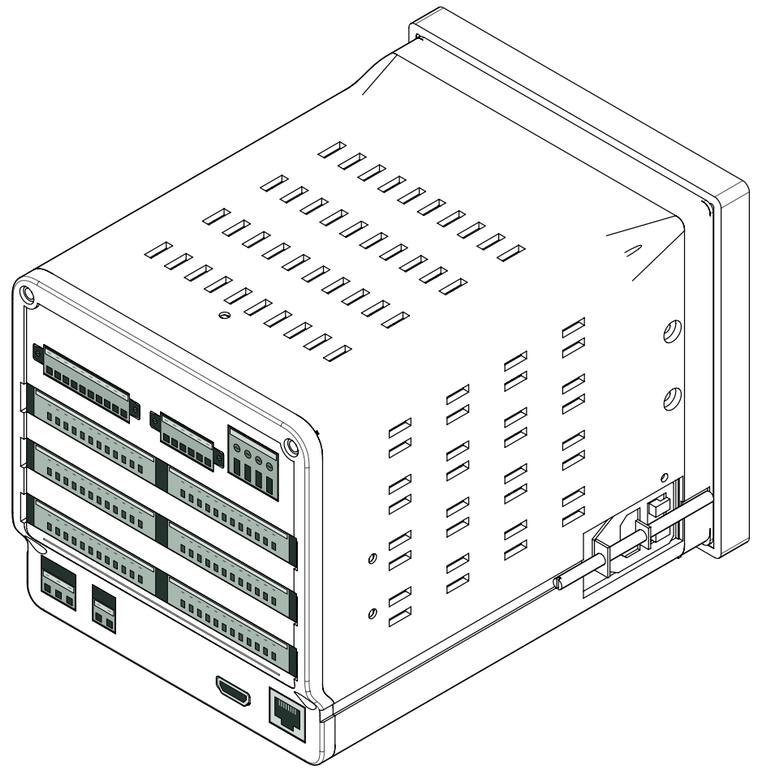

Rear · left · top

Example three-card configuration
Left NGS-NK side clamp

Read overall dimensions on sheet 1.

ISO 5456-3 · Orthogonal isometric projection

DRAWING	MODEL	PROJECTION	SCALE · UNITS	ISSUE DATE	SHEET
Assembled isometrics · R24-MECH V1.2	**R24**	**Orthogonal isometric**	**1:2 at A3 · mm**	**26 November 2026**	**2 / 2**